NOX CYCLES

E P I U M

INFO BOOKLET

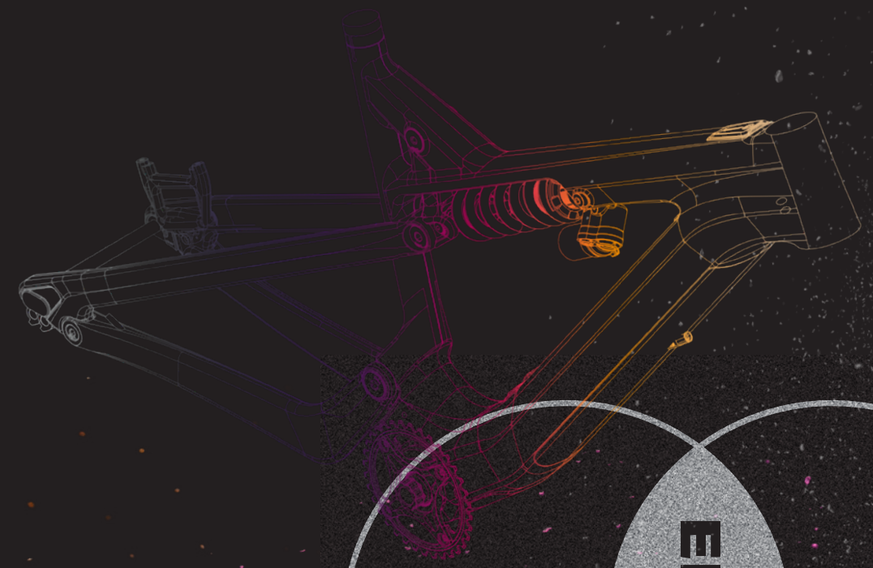

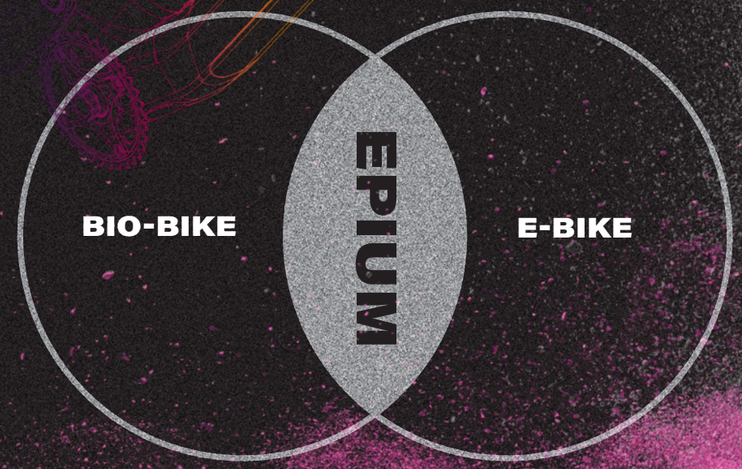

EPIUM

PROGRESSIVE				NATURAL
	EFFICIENT		SLIM	
		AGILE	ULTRA LIGHT	

WIE AUS EINER ANDEREN WELT. HIER IN EUROPA HERGESTELLT.

Mit der NOX EPIUM Serie setzen wir die ungeschriebenen Gesetze von E-Bikes außer Kraft. Als Symbiose zwischen E-Bike und Bio-Bike katapultiert dich das EPIUM in andere Sphären. Du bekommst die Kraft, höher und weiter zu fahren und gleichzeitig das natürliche Fahrgefühl, das wir alle lieben. Es ermöglicht dir, mehr zu erleben als je zuvor - sowohl bei ausgedehnten Abenteuertouren als auch für adrenalingeladene Bikepark Rides. Unser Full-Suspension Segment hat seinen neuen Höhepunkt erreicht. NOX EPIUM. Leicht, leise, kraftvoll und progressiv. Sei bereit für eine E-MTB-Erfahrung, die über Körper und Verstand hinausgeht – entwickelt und produziert in Europa.

OUT OF THIS WORLD FEELING. MADE HERE IN EUROPE.

With the NOX EPIUM series, we challenge the unwritten laws of e-biking. The EPIUM is where e-bike and bio-bike meet, catapulting you into other spheres. You'll get the power to ride higher and further while maintaining that natural riding feel we all love. Experience more than ever before – both on longer-distance tours and during adrenaline-infused park rides. Our full suspension segment found its new high. NOX EPIUM. Light, quiet, powerful and progressive. Be ready for an e-mtb experience that goes beyond body and mind – developed and produced in Europe.

AUSTRIA

Design & Entwicklung / *Design & Development*
Montage / *Assembly*

GERMANY

Lackierung, Decals / *Painting, decals*
Press-Montage / *Press fittings*

PORTUGAL

Produktion Ultraleicht-Carbon-Rahmen
Production of ultralight carbon frame

EPIUM

MARS | JUPITER | MOON

Hand-lackiert / 2-farbig / Mondstaub Effekt

Hand-painted / 2-tone / Moondust effect

ULTRA-LIGHT CONCEPT

FULL-CARBON FRAME 100% MONOCOQUE

ENERGY RIDE SYSTEM (60 NM / 430 WH)

FLEX-PLUS STANDARD 2.0

CONNECTIVITY (RING CONTROL / LED HUB)

- Kraftvolle und natürliche Unterstützung
- Hocheffizientes Antriebssystem
- Überragendes Leistungsgewicht auf kleinstem Raum
- Einzigartiges natürliches Fahrgefühl
- Nahezu geräuschlo

- *Powerful and natural support*
- *Highly efficient drive system*
- *Outstanding power-to-weight ratio in the smallest space*
- *Unique natural riding feel*
- *Nearly noiseless*

FAZUA RIDE 60

MAX. DREHMOMENT / TORQUE	60 Nm
MAXIMALE LEISTUNG / MAXIMUM RATED POWER	450 W max
GEWICHT / WEIGHT	1,69 kg

FAZUA ENERGY 430

NEU! **430 Wh**

- Kompakter Akku für lange Touren
- Griff für einfaches Handling
- Beim Bewegen des Fahrrads wird der Akku automatisch eingeschaltet

- *Compact battery for long tours*
- *With convenient handle*
- *Battery switches on automatically, when bike is in motion*

BATTERIEKAPAZITÄT / BATTERY CAPACITY	430 Wh
GEWICHT / WEIGHT	2,3 kg

TECH & INNOVATION

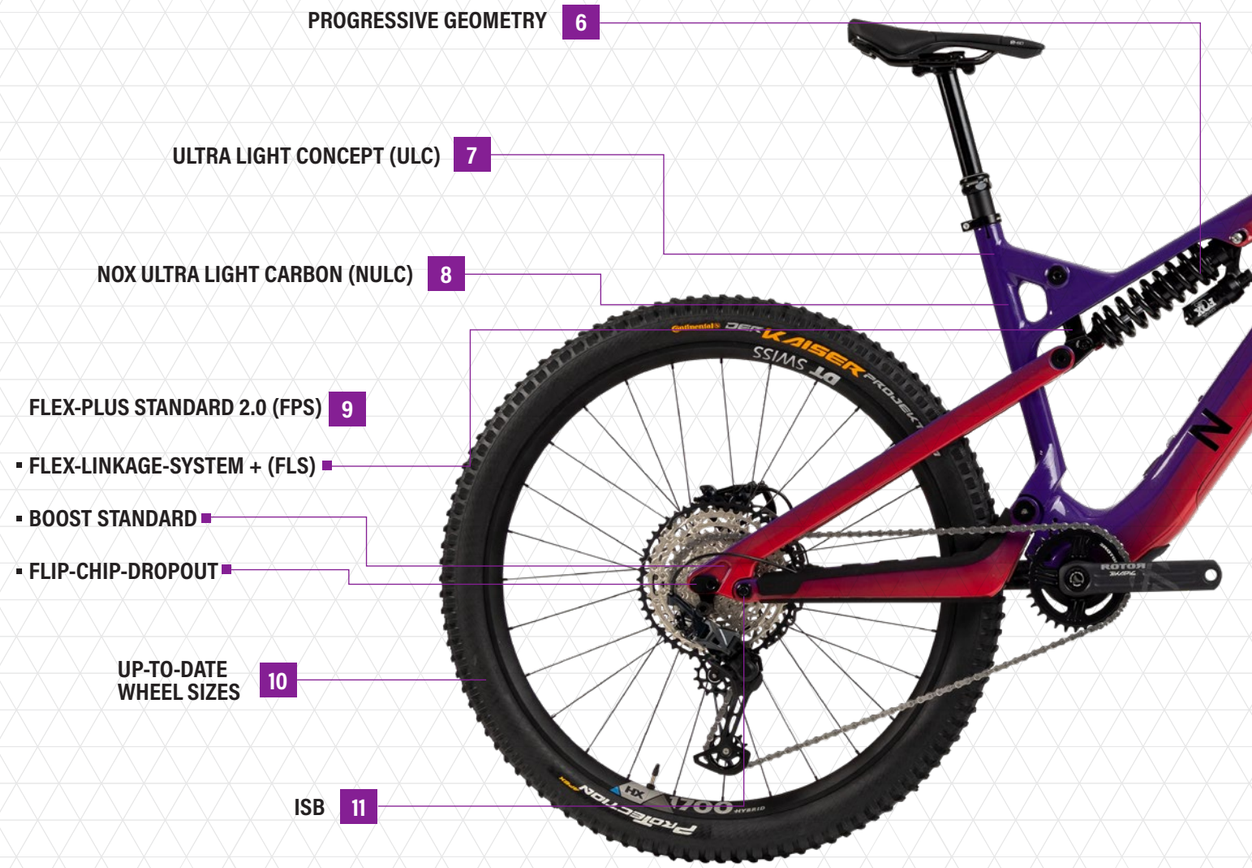

1 CONTROL AND CONNECT

RING CONTROL

Minimalistische Bedienung, extrem intuitiv (Fahrmodus, Schiebehilfe, Licht etc.)
Minimalist interface, extremely intuitive (riding mode, push assist, lights, etc.)

FAZUA

LED HUB

Die wichtigsten Informationen übersichtlich im Oberrohr integriert (Ladezustand, Fahrmodus) + USB-C Ladeport
The most essential information clearly integrated in the top tube (charging status, riding mode) + USB-C charging port

RIDER APP

Verbindung mit Smartphone (Navigation, Fahrinformationen, Individualisierung der einzelnen Fahrmodi etc.)
Connection with smartphone (navigation, riding information, individualization of the individual riding modes etc.)

2 ICR STANDARD

Saubere Optik durch integrierte Kabelführungen
Neat and tidy appearance thanks to integrated cable routing

3 WARRANTY +CRASH REPLACEMENT

Freiwillige Herstellergarantie auf Rahmen und Schwinge + Crash Replacement Service (CRS)
Voluntary manufacturer's guarantee on the frame and swing arm + Crash Replacement Service (CRS)

4 E-ONLY

E-Bike optimierte und zertifizierte Komponenten
Components optimized and certified for e-bikes

NEW
Fidlock Akku-Cover Verschluss
Fidlock battery cover lock

FIDLOCK

5 ENERGY RIDE SYSTEM

RIDE 60 DRIVE UNIT

FAZUA

NEW!

36 V, 250 W, 60 Nm
Kraftvolle und natürliche Unterstützung, nahezu geräuschlos
Powerful and natural assistance, nearly noiseless

ENERGY 430 BATTERY

430 Wh, 36 V, 2.3 kg
Voll integrierter high-performance Wechselakku
Fully intgrated, high-performace replaceable battery

6 PROGRESSIVE GEOMETRY

- Schlankes Rahmendesign
- Langer Radstand
- Flacher Lenkwinkel

- *Slim frame design*
- *Long wheelbase*
- *Flat steering angle*

7 ULC

Agiles und natürliches Handling durch äußerst geringes Gesamtgewicht (Carbon-Vollrahmen, FAZUA Ride System etc.)
Agile and natural handling thanks to low overall weight (carbon main frame, FAZUA Ride System etc.)

8 NULC

- Voll-Carbon Rahmen
- 100% monocoque
- Made in Europe

- *Carbon full-frame*
- *100% monocoque*
- *Made in Europe*

9 FLEX-PLUS STANDARD 2.0 (FPS)

FLEX-LINKAGE-SYSTEM (FLS)

Erweiterte Anpassungsmöglichkeiten für optimale / individuell einstellbare Fahrradgeometrie
Extended customization options for optimal / individually adjustable bike geometry

BOOST STANDARD

Reifenbreite bis zu 2,8"
Tire width up to 2.8"

FLIP-CHIP-DROPOUT

Laufradgröße 27,5" oder 29"
Wheel size 27.5" or 29"

10 UP-TO-DATE WHEEL SIZES

ALL-MTN: 29"
ENDURO: 29" / 27,5" (Mullet)

11 ISB

Integrierter Speedsensor mit Bremsscheibenmagnet
Integrated speed sensor with brake disc magnet

EPIUM 7.1

FAZUA

MOON

FARBVARIANTEN *COLOR VARIANTS*

MARS

JUPITER

RAHMENGEOMETRIEN *GEOMETRY AND DATA CHART*

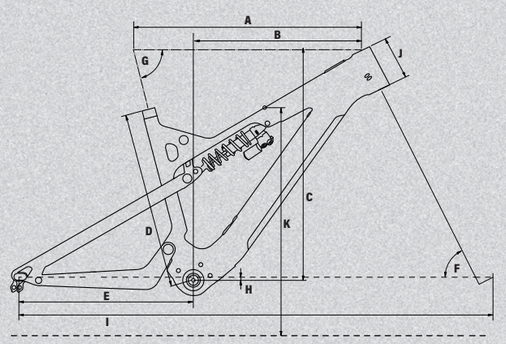

		EINHEIT / UNIT	S	M	L
A	Oberrohr / Top tube	mm	596	610	636
B	Reach / Reach	mm	416	434	457
C	Stack / Stack	mm	607	619	631
D	Sitzrohr / Seat tube	mm	435	460	460
E	Kettenstrebe / Chain stay *	mm	453	453	453
F	Lenkwinkel / Steering Angle	degree / °	63,9	63,6	63,6
G	Sitzwinkel / Seat angle	degree / °	74,4	74,2	74,2
H	BB Drop / BB drop	mm	6	4	4
I	Radstand / Wheel base *	mm	1214	1242	1267
J	Steuerrohr / Head tube	mm	105	115	128
K	Überstandshöhe / Standover height	mm	744	744	744

** Factory Set-up / Geoflip front*

Abbildungen können von der Spezifikation abweichen / *Images may differ from the specification*
Ausstattungsänderungen vorbehalten / *Equipment subject to change*
Preise bitte der beigelegten Liste entnehmen / *Please refer to the attached list for prices*

SPEZIFIKATIONEN *SPECIFICATIONS* / EPIUM ENDURO 7.1

	ULTRA	PRO	CORE
RAHMEN / FRAME	NOX Epium Enduro 180mm NUC+	NOX Epium Enduro 180mm NUC+	NOX Epium Enduro 180mm NUC+
FARBEN / COLORS	Moon	Jupiter / Mars	Jupiter / Mars
GRÖSSEN / SIZES	S / M / L	S / M / L	S / M / L
ANTRIEB / MOTORSET	FAZUA Ride 60 / 60Nm	FAZUA Ride 60 / 60Nm	FAZUA Ride 60 / 60Nm
AKKU / BATTERY	FAZUA Energy 430 / 430Wh	FAZUA Energy 430 / 430Wh	FAZUA Energy 430 / 430Wh
BEDIENUNG / REMOTE	FAZUA Ring Control + LED Hub	FAZUA Ring Control + LED Hub	FAZUA Ring Control + LED Hub
GABEL / FORK	FOX 38 K FLOAT 29in F-S 180 Grip 2 HSC LSC HSR LSR	FOX 38 FLOAT 29in P-S 180 Grip 3Pos	FOX 38 FLOAT 29in Rhythm E-Optimized 180 Grip Sweep-Adj
DÄMPFER / REAR SHOCK	FOX DHX2 F-S Cr 2pos-Adj FOX AM 230-60 CM RM	FOX DHX P-S Cr 2pos Nox Expert 230-60 CM PRM	MARZOCCHI Bomber CR AM 230-60 CM RM
FEDER S / SPRING S	FOX SLS 135mm TLG 35mm ID X 500lb/in X 2.65in/67mm Travel	FOX-Stahlfeder 145mm TLG 35mm ID: 500 x 2.800"	FOX-Stahlfeder 145mm TLG 35mm ID: 500 x 2.800"
FEDER M / SPRING M	FOX SLS 137mm TLG 35mm ID X 550lb/in X 2.65in/67mm Travel	FOX-Stahlfeder 151mm TLG 35mm ID: 550 x 2.800"	FOX-Stahlfeder 151mm TLG 35mm ID: 550 x 2.800"
FEDER L / SPRING L	FOX SLS 139mm TLG 35mm ID X 600lb/in X 2.65in/67mm Travel	FOX-Stahlfeder 156mm TLG 35mm ID: 600 x 2.550"	FOX-Stahlfeder 156mm TLG 35mm ID: 600 x 2.550"
VORBAU / STEM	RACE FACE Atlas 35	RACE FACE Atlas 35	RACE FACE Chester 35
STEUERSATZ / HEADSET	FIRST NOX Components ZS44/56	FIRST NOX Components ZS44/56	FIRST NOX Components ZS44/56
GRIFFE / GRIPS	ODI Elite Flow Lock-on 2.1	ODI Elite Flow Lock-on 2.1	ODI Elite Flow Lock-on 2.1
LENKER / HANDLEBAR	RACE FACE SixC 35 Carbon 20mm Fox Orange	RACE FACE Atlas 35	RACE FACE Chester 35
SATTEL / SADDLE	PROLOGO Proxim W650 Microfiber P1 +Grip	PROLOGO Proxim W450 Microfiber	PROLOGO Proxim W350 Microfiber
SATTELSTÜTZE / SEAT POST S	FOX Transfer F-S K Ø 30.9mm 125mm Drop Internal AM	FOX Transfer P-SE A Ø 30.9mm 125mm Drop Internal AM	Telescoping
SATTELSTÜTZE / SEAT POST M	FOX Transfer F-S K Ø 30.9mm 150mm Drop Internal AM	FOX Transfer P-SE A Ø 30.9mm 150mm Drop Internal AM	Telescoping
SATTELSTÜTZE / SEAT POST L	FOX Transfer F-S K Ø 30.9mm 175mm Drop Internal AM	FOX Transfer P-SE A Ø 30.9mm 175mm Drop Internal AM	Telescoping
KURBELN / CRANKSET	FSA	FSA	FSA
SCHALTWERK / REAR DERAILLEUR	SHIMANO XT RD-M8100 12-speed	SHIMANO SLX RD-M7100 12-speed	SHIMANO DEORE RD-M5130 10-speed LG
SHIFTER RECHTS / SHIFTER RIGHT	SHIMANO XT CS-M8100 12-speed 10-51T	SHIMANO SL-M6100 12-speed I-spec EV	SHIMANO LinkGlide CS-LG600 10-speed 11-43T
RITZELPAKET / CASSETTE	SHIMANO XT SL-M8100 12-speed I-spec EV	SHIMANO SLX CS-M7100 12-speed 10-51T	SHIMANO DEORE SL-M5130 10-speed LG
BREMSE VO. / BRAKE FR.	SHIMANO XT front BL-M8100/BR-M8120	SHIMANO SLX front BL-M7100/BR-M7120	SHIMANO front BL-MT401/BR-MT420
BREMSE HI. / BRAKE RE.	SHIMANO XT rear BL-M8100/BR-M8120	SHIMANO SLX rear BL-M7100/BR-M7120	SHIMANO rear BL-MT401/BR-MT420
BREMSSCHEIBE VO. / BRAKE DISC FR.	SHIMANO RT-66 220mm	SHIMANO RT-66 203mm	SHIMANO RT-66 203mm
BREMSSCHEIBE HI. / BRAKE DISC RE.	SHIMANO RT-66 203mm	SHIMANO RT-66 180mm	SHIMANO RT-66 180mm
LAUFRAD VO. / WHEEL FR.	DT SWISS HX1501 "Mullet" 29" VR 30mm	DT SWISS HX1700 "Mullet" 29" VR 30mm	DT SWISS H1900 "Mullet" 29" VR 30mm
LAUFRAD HI. / WHEEL RE.	DT SWISS HX1501 "Mullet" 27,5" HR 35mm	DT SWISS HX1700 "Mullet" 27,5" HR 35mm	DT SWISS H1900 "Mullet" 27,5" HR 35mm
REIFEN VO. / TIRE FR.	CONTINENTAL Argotal Enduro Soft foldable skin SL	CONTINENTAL Argotal Enduro Soft foldable skin SL	CONTINENTAL Argotal Trail Endurance foldable skin SL
REIFEN HI. / TIRE RE.	CONTINENTAL Argotal Enduro Soft foldable skin SL	CONTINENTAL Argotal Enduro Soft foldable skin SL	CONTINENTAL Argotal Trail Endurance foldable skin SL

ART. NR/ NO	GRÖSSE/ SIZE	FARBE/ COLOR
23324	S	Moon
23325	M	Moon
23326	L	Moon

ART. NR/NO	GRÖSSE/ SIZE	FARBE/ COLOR
23318	S	Mars
23319	M	Mars
23320	L	Mars
23321	S	Jupiter
23322	M	Jupiter
23323	L	Jupiter

ART. NR/NO	GRÖSSE/ SIZE	FARBE/ COLOR
23312	S	Mars
23313	M	Mars
23314	L	Mars
23315	S	Jupiter
23316	M	Jupiter
23317	L	Jupiter

EPIUM 5.9

FAZUA

MOON

FARBVARIANTEN *COLOR VARIANTS*

MARS

JUPITER

RAHMENGEOMETRIEN *GEOMETRY AND DATA CHART*

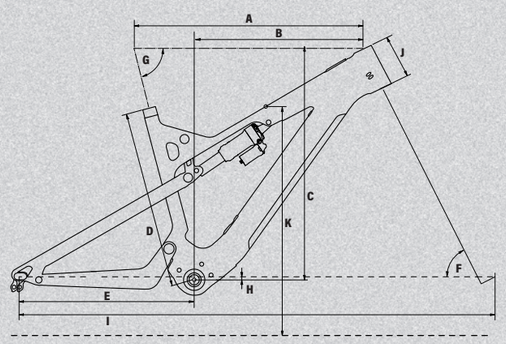

		EINHEIT / UNIT	S	M	L
A	Oberrohr / Top tube	mm	583	607	633
B	Reach / Reach	mm	424	446	468
C	Stack / Stack	mm	602	611	623
D	Sitzrohr / Seat tube	mm	435	460	460
E	Kettenstrebe / Chain stay *	mm	469	469	469
F	Lenkwinkel / Steering Angle	degree / °	64,7	64,7	64,7
G	Sitzwinkel / Seat angle	degree / °	75,2	75,2	75,2
H	BB Drop / BB drop	mm	10	10	10
I	Radstand / Wheel base *	mm	1223	1248	1276
J	Steuerrohr / Head tube	mm	105	115	128
K	Überstandshöhe / Standover height	mm	744	744	744

** Factory Set-up / Geoflip front*

Abbildungen können von der Spezifikation abweichen / *Images may differ from the specification*
Ausstattungsänderungen vorbehalten / *Equipment subject to change*
Preise bitte der beigelegten Liste entnehmen / *Please refer to the attached list for prices*

SPEZIFIKATIONEN *SPECIFICATIONS* / EPIUM ALL-MTN 5.9

	ULTRA	PRO	CORE
RAHMEN / FRAME	NOX Epium All-Mountain 150mm NUC+	NOX Epium All-Mountain 150mm NUC+	NOX Epium All-Mountain 150mm NUC+
FARBEN / COLORS	Moon	Jupiter / Mars	Jupiter / Mars
GRÖSSEN / SIZES	S / M / L	S / M / L	S / M / L
ANTRIEB / MOTORSET	FAZUA Ride 60 / 60Nm	FAZUA Ride 60 / 60Nm	FAZUA Ride 60 / 60Nm
AKKU / BATTERY	FAZUA Energy 430 / 430Wh	FAZUA Energy 430 / 430Wh	FAZUA Energy 430 / 430Wh
BEDIENUNG / REMOTE	FAZUA Ring Control + LED Hub	FAZUA Ring Control + LED Hub	FAZUA Ring Control + LED Hub
GABEL / FORK	FOX 36 FLOAT 29in F-S E-Optimized 160 Grip 2 HSC LSC HSR LSR	FOX FLOAT 29in P-S E-Optimized 160 Grip 3Pos	MARZOCCHI Bomber Z1 29in 160 Grip Sweep-Adj
DÄMPFER / REAR SHOCK	FOX FLOAT X F-S K 2pos-Adj Evol LV FOX AM	FOX FLOAT X P-S A 2pos Evol LV Nox Expert	FOX FLOAT DPS P-S A 3pos Evol LV Nox Comp
VORBAU / STEM	RACE FACE Turbine 35	RACE FACE Turbine 35	RACE FACE Aeffect 35
STEUERSATZ / HEADSET	NOX Components ZS44/56	NOX Components ZS44/56	NOX Components ZS44/56
GRIFFE / GRIPS	ODI Elite Flow Lock-on 2.1	ODI Elite Flow Lock-on 2.1	ODI Elite Flow Lock-on 2.1
LENKER / HANDLEBAR	RACE FACE Next R 35 Carbon	RACE FACE Turbine R 35	RACE FACE Aeffect R 35
SATTEL / SADDLE	PROLOGO Proxim W650 Microfiber P1 +Grip	PROLOGO Proxim W450 Microfiber	PROLOGO Proxim W350 Microfiber
SATTELSTÜTZE / SEAT POST S	FOX Transfer F-S K Ø 30.9mm 125mm Drop Internal AM	FOX Transfer P-SE A Ø 30.9mm 125mm Drop Internal AM	Telescoping
SATTELSTÜTZE / SEAT POST M	FOX Transfer F-S K Ø 30.9mm 150mm Drop Internal AM	FOX Transfer P-SE A Ø 30.9mm 150mm Drop Internal AM	Telescoping
SATTELSTÜTZE / SEAT POST L	FOX Transfer F-S K Ø 30.9mm 175mm Drop Internal AM	FOX Transfer P-SE A Ø 30.9mm 175mm Drop Internal AM	Telescoping
KURBELN / CRANKSET	FSA	FSA	FSA
SCHALTWERK / REAR DERAILLEUR	SHIMANO XTR RD-M9100 12-speed	SHIMANO SLX RD-M7100 12-speed	SHIMANO DEORE RD-M5130 10-speed LG
SHIFTER RECHTS / SHIFTER RIGHT	SHIMANO XTR SL-M9100 12-speed I-spec EV	SHIMANO SL-M6100 12-speed I-spec EV	SHIMANO LinkGlide CS-LG600 10-speed 11-43T
RITZELPAKET / CASSETTE	SHIMANO XTR CS-M9100 12-speed 10-51T	SHIMANO SLX CS-M7100 12-speed 10-51T	SHIMANO DEORE SL-M5130 10-speed LG
BREMSE VO. / BRAKE FR.	SHIMANO XTR front BL-M9100/BR-M9120	SHIMANO SLX front BL-M7100/BR-M7120	SHIMANO front BL-MT401/BR-MT420
BREMSE HI. / BRAKE RE.	SHIMANO XTR rear BL-M9100/BR-M9120	SHIMANO SLX rear BL-M7100/BR-M7120	SHIMANO rear BL-MT401/BR-MT420
BREMSSCHEIBE VO. / BRAKE DISC FR.	SHIMANO RT-86 203mm	SHIMANO RT-66 203mm	SHIMANO RT-66 203mm
BREMSSCHEIBE HI. / BRAKE DISC RE.	SHIMANO RT-86 203mm	SHIMANO RT-66 180mm	SHIMANO RT-66 180mm
LAUFRAD VO. / WHEEL FR.	DT SWISS EX1700 29" VR 30mm	DT SWISS E1900 29" VR 30mm	DT SWISS H1900 29" VR 30mm
LAUFRAD HI. / WHEEL RE.	DT SWISS EX1700 29" HR 30mm	DT SWISS E1900 29" HR 30mm	DT SWISS H1900 29" HR 30mm
REIFEN VO. / TIRE FR.	CONTINENTAL Kryptotal-F Enduro Soft foldable skin SL	CONTINENTAL Kryptotal-F Enduro Soft foldable skin SL	CONTINENTAL Kryptotal-F Trail Endurance foldable skin SL
REIFEN HI. / TIRE RE.	CONTINENTAL Kryptotal-R Enduro Soft foldable skin SL	CONTINENTAL Kryptotal-R Enduro Soft foldable skin SL	CONTINENTAL Kryptotal-R Trail Endurance foldable skin SL

ART. NR/ NO	GRÖSSE/ SIZE	FARBE/ COLOR
23309	S	Moon
23310	M	Moon
23311	L	Moon

ART. NR/NO	GRÖSSE/ SIZE	FARBE/ COLOR
23303	S	Mars
23304	M	Mars
23305	L	Mars
23306	S	Jupiter
23307	M	Jupiter
23308	L	Jupiter

ART. NR/NO	GRÖSSE/ SIZE	FARBE/ COLOR
23297	S	Mars
23298	M	Mars
23299	L	Mars
23300	S	Jupiter
23301	M	Jupiter
23302	L	Jupiter

NOX EPIUM ENDURO 7.1 FAZUA

ARTIKELNUMMER	AUSSTATTUNG	MOTOR	AKKULEISTUNG	GRÖSSE	FARBE	LAUFRÄDER	BEDIENUNG	UVP BRUTTO
ARTICLE NUMBER	*SPECIFICATION*	*MOTOR*	*BATTERY POWER*	*SIZE*	*COLOR*	*WHEELS*	*REMOTE*	*MSRP GROSS*
23312	Core	FAZUA RIDE 60	430 Wh	S	Mars	29" / 27,5"	FAZUA Ring Control + LED Hub	€ 8.699
23313	Core	FAZUA RIDE 60	430 Wh	M	Mars	29" / 27,5"	FAZUA Ring Control + LED Hub	€ 8.699
23314	Core	FAZUA RIDE 60	430 Wh	L	Mars	29" / 27,5"	FAZUA Ring Control + LED Hub	€ 8.699
23315	Core	FAZUA RIDE 60	430 Wh	S	Jupiter	29" / 27,5"	FAZUA Ring Control + LED Hub	€ 8.699
23316	Core	FAZUA RIDE 60	430 Wh	M	Jupiter	29" / 27,5"	FAZUA Ring Control + LED Hub	€ 8.699
23317	Core	FAZUA RIDE 60	430 Wh	L	Jupiter	29" / 27,5"	FAZUA Ring Control + LED Hub	€ 8.699
23318	Pro	FAZUA RIDE 60	430 Wh	S	Mars	29" / 27,5"	FAZUA Ring Control + LED Hub	€ 9.299
23319	Pro	FAZUA RIDE 60	430 Wh	M	Mars	29" / 27,5"	FAZUA Ring Control + LED Hub	€ 9.299
23320	Pro	FAZUA RIDE 60	430 Wh	L	Mars	29" / 27,5"	FAZUA Ring Control + LED Hub	€ 9.299
23321	Pro	FAZUA RIDE 60	430 Wh	S	Jupiter	29" / 27,5"	FAZUA Ring Control + LED Hub	€ 9.299
23322	Pro	FAZUA RIDE 60	430 Wh	M	Jupiter	29" / 27,5"	FAZUA Ring Control + LED Hub	€ 9.299
23323	Pro	FAZUA RIDE 60	430 Wh	L	Jupiter	29" / 27,5"	FAZUA Ring Control + LED Hub	€ 9.299
23324	Ultra	FAZUA RIDE 60	430 Wh	S	Moon	29" / 27,5"	FAZUA Ring Control + LED Hub	€ 10.999
23325	Ultra	FAZUA RIDE 60	430 Wh	M	Moon	29" / 27,5"	FAZUA Ring Control + LED Hub	€ 10.999
23326	Ultra	FAZUA RIDE 60	430 Wh	L	Moon	29" / 27,5"	FAZUA Ring Control + LED Hub	€ 10.999

NOX EPIUM ALL-MOUNTAIN 5.9 FAZUA

ARTIKELNUMMER	AUSSTATTUNG	MOTOR	AKKULEISTUNG	GRÖSSE	FARBE	LAUFRÄDER	BEDIENUNG	UVP BRUTTO
ARTICLE NUMBER	*SPECIFICATION*	*MOTOR*	*BATTERY POWER*	*SIZE*	*COLOR*	*WHEELS*	*REMOTE*	*MSRP GROSS*
23297	Core	FAZUA RIDE 60	430 Wh	S	Mars	29"	FAZUA Ring Control + LED Hub	€ 8.599
23298	Core	FAZUA RIDE 60	430 Wh	M	Mars	29"	FAZUA Ring Control + LED Hub	€ 8.599
23299	Core	FAZUA RIDE 60	430 Wh	L	Mars	29"	FAZUA Ring Control + LED Hub	€ 8.599
23300	Core	FAZUA RIDE 60	430 Wh	S	Jupiter	29"	FAZUA Ring Control + LED Hub	€ 8.599
23301	Core	FAZUA RIDE 60	430 Wh	M	Jupiter	29"	FAZUA Ring Control + LED Hub	€ 8.599
23302	Core	FAZUA RIDE 60	430 Wh	L	Jupiter	29"	FAZUA Ring Control + LED Hub	€ 8.599
23303	Pro	FAZUA RIDE 60	430 Wh	S	Mars	29"	FAZUA Ring Control + LED Hub	€ 9.199
23304	Pro	FAZUA RIDE 60	430 Wh	M	Mars	29"	FAZUA Ring Control + LED Hub	€ 9.199
23305	Pro	FAZUA RIDE 60	430 Wh	L	Mars	29"	FAZUA Ring Control + LED Hub	€ 9.199
23306	Pro	FAZUA RIDE 60	430 Wh	S	Jupiter	29"	FAZUA Ring Control + LED Hub	€ 9.199
23307	Pro	FAZUA RIDE 60	430 Wh	M	Jupiter	29"	FAZUA Ring Control + LED Hub	€ 9.199
23308	Pro	FAZUA RIDE 60	430 Wh	L	Jupiter	29"	FAZUA Ring Control + LED Hub	€ 9.199
23309	Ultra	FAZUA RIDE 60	430 Wh	S	Moon	29"	FAZUA Ring Control + LED Hub	€ 10.899
23310	Ultra	FAZUA RIDE 60	430 Wh	M	Moon	29"	FAZUA Ring Control + LED Hub	€ 10.899
23311	Ultra	FAZUA RIDE 60	430 Wh	L	Moon	29"	FAZUA Ring Control + LED Hub	€ 10.899

IMPRESSUM
Nox Cycles Austria GmbH
Schlitters 98i, Gewerbegebiet Süd
6262 Schlitters
Austria

Version: Dealerbook Preisliste MY23 V1.1
Nur für den internen Gebrauch / *For internal use only*

Preis- und Ausstattungsänderungen vorbehalten.
Keine Gewähr für Druckfehler oder unvollständige Daten.

Price and equipment subject to change.
No liability for printing errors.